June 23, 2021

GCAL Certificate No: 311610140

Gemprint® is the unique optical fingerprint for positive identification of your lab grown diamond. Protect your investment by registering your lab grown diamond at www.Gemprint.com and receive insurance discounts up to 10%

Gemprint

Girdle laser inscribed "LAB GROWN" and "LG311610140"

*Comments: This man-made diamond was grown in a laboratory by the CVD method, and has the same chemical, physical, and optical properties as a natural earth mined diamond. This lab grown diamond is classified as Type IIa, which is the most chemically pure type of diamond, and almost or entirely devoid of impurities. Only 1-2% of natural earth mined diamonds are Type IIa, whereas, colorless and near-colorless CVD lab grown diamonds are usually Type IIa.

GCAL GEM CERTIFICATION & ASSURANCE LAB
ISO 17025 ACCREDITED FORENSIC LABORATORY

580 Fifth Ave LL-05, New York, NY 10036
T 212-869-8985 GCALUSA.com

© Gem Certification & Assurance Lab, Inc.

ISO/IEC 17025 2017
ANAB L2177-1 Accredited Testing Lab

LAB GROWN DIAMOND*

Carat Weight:	**1.02**
Cut:	**Excellent**
Shape:	Princess
Measurements:	5.43x5.42x3.97mm
Polish:	Excellent
External Symmetry:	Very Good
Girdle Thickness:	Sl.Thick-Thick
Culet Size:	None
Color:	**E**
Fluorescence:	None
Clarity:	**VS1**
Identifying Characteristic(s):	Needle/Crystal/Feathers
Characteristic Location(s):	Table/Crown Step/Pavilion

Proportion Diagram:

The proportion diagram illustrates the actual dimensions as recorded by optical scanning technology.

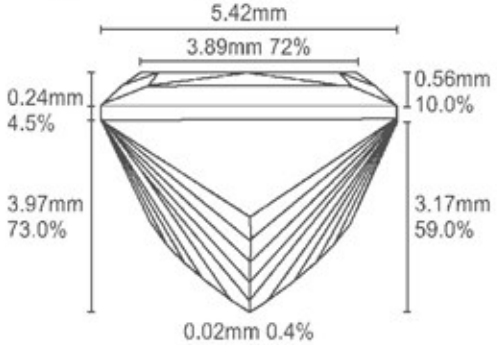

ELECTRONIC COPY

© 2021 GCAL