June 16, 2021

GCAL Certificate No: 311550520

Gemprint® is the unique optical fingerprint for positive identification of your lab grown diamond. Protect your investment by registering your lab grown diamond at www.Gemprint.com and receive insurance discounts up to 10%

Gemprint

Girdle laser inscribed "LAB GROWN" and "LG311550520"

*Comments: This man-made diamond was grown in a laboratory by the HPHT method, and has the same chemical, physical, and optical properties as a natural earth mined diamond.

ELECTRONIC COPY

LAB GROWN DIAMOND*

Carat Weight:	**0.61**
Cut:	**Very Good**
Shape:	Princess
Measurements:	4.68x4.59x3.30mm
Polish:	Good
External Symmetry:	Good
Girdle Thickness:	Thin-Medium
Culet Size:	None
Color:	**E**
Fluorescence:	None
Clarity:	**VS1**
Identifying Characteristic(s):	Cloud
Characteristic Location(s):	Crown Corner

Proportion Diagram:

The proportion diagram illustrates the actual dimensions as recorded by optical scanning technology.

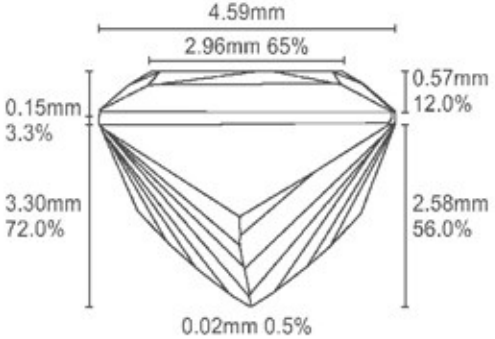

GCAL GEM CERTIFICATION & ASSURANCE LAB
ISO 17025 ACCREDITED FORENSIC LABORATORY

580 Fifth Ave LL-05, New York, NY 10036
T 212-869-8985 GCALUSA.com

© Gem Certification & Assurance Lab, Inc.

ISO/IEC 17025 2017
ANAB L2177-1 Accredited Testing Lab

© 2021 GCAL