June 15, 2021

GCAL Certificate No: 311550479

Gemprint® is the unique optical fingerprint for positive identification of your lab grown diamond. Protect your investment by registering your lab grown diamond at www.Gemprint.com and receive insurance discounts up to 10%

Gemprint

Girdle laser inscribed "LAB GROWN" and "LG311550479"

*Comments: This man-made diamond was grown in a laboratory by the HPHT method, and has the same chemical, physical, and optical properties as a natural earth mined diamond.

GCAL GEM CERTIFICATION & ASSURANCE LAB
ISO 17025 ACCREDITED FORENSIC LABORATORY

ISO/IEC 17025 2017
ANAB L2177-1
Accredited Testing Lab

GCAL INTEGRITY GUARANTEED

LAB GROWN DIAMOND*

Carat Weight:	**0.55**
Cut:	**Very Good**
Shape:	Princess
Measurements:	4.42x4.40x3.30mm
Polish:	Good
External Symmetry:	Good
Girdle Thickness:	Medium-Very Thick
Culet Size:	None
Color:	**F**
Fluorescence:	None
Clarity:	**VS1**
Identifying Characteristic(s):	Crystal/Needles
Characteristic Location(s):	Table/Crown Corner

Proportion Diagram:

The proportion diagram illustrates the actual dimensions as recorded by optical scanning technology.

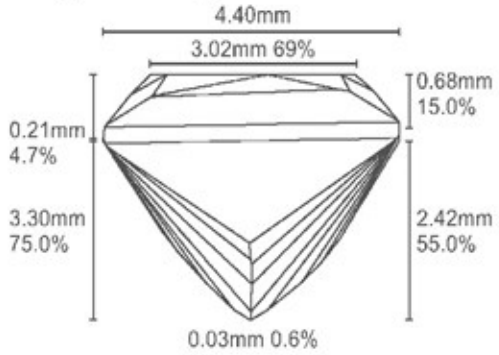

ELECTRONIC COPY

580 Fifth Avenue LL-05, NY, NY 10036 USA • T 212.869.8985

© Gem Certification & Assurance Lab, Inc. All Rights Reserved

© 2021 GCAL

www.GCALUSA.com