July 23, 2020

GCAL Certificate No: 301920429

Gemprint® is the unique optical fingerprint for positive identification of your lab grown diamond. Protect your investment by registering your lab grown diamond at www.Gemprint.com and receive insurance discounts up to 10%

Gemprint

Girdle laser inscribed "LAB GROWN" and "LG301920429"

*Comments: This man-made diamond was grown in a laboratory by the CVD method, and has the same chemical, physical, and optical properties as a natural earth mined diamond. This lab grown diamond is classified as Type IIa, which is the most chemically pure type of diamond, and almost or entirely devoid of impurities. Only 1-2% of natural earth mined diamonds are Type IIa, whereas, colorless and near-colorless CVD lab grown diamonds are usually Type IIa.

GCAL
GEM CERTIFICATION & ASSURANCE LAB
INTEGRITY GUARANTEED™

ISO 17025
Laboratory Accredited

LAB GROWN DIAMOND*

Carat Weight:	**1.08**
Cut:	**Very Good**
Shape:	Princess
Measurements:	5.78x5.50x3.93mm
Polish:	Good
External Symmetry:	Good
Girdle Thickness:	Thin-Medium
Culet Size:	None
Color:	**F**
Fluorescence:	None
Clarity:	**VS1**
Identifying Characteristic(s):	Crystals
Characteristic Location(s):	Table,Crown Step

Proportion Diagram:

The proportion diagram illustrates the actual dimensions as recorded by optical scanning technology.

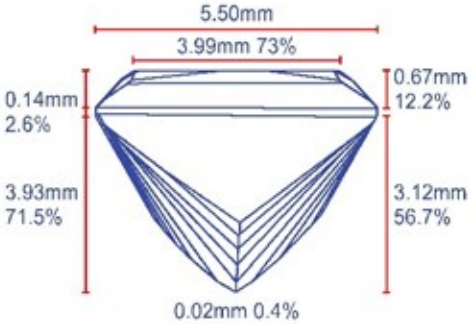

ELECTRONIC COPY

580 Fifth Avenue, LL-05, New York, NY 10036
T 212.869.8985 F 212.869.2315

© 2020 GCAL

www.DiamondID.com www.GemFacts.com

© 2015 Gem Certification & Assurance Lab, Inc. All Rights Reserved