GCAL 8X™
GEM CERTIFICATION & ASSURANCE LAB

ELECTRONIC COPY

LAB GROWN DIAMOND

GCAL LG350650232

March 19, 2025

4C's GRADING

Carat Weight	**1.87**
Color	**E**
Clarity	**VVS1**
Cut	8X

Certificate No	**GCAL LG350650232**
Identification	**Lab Grown Diamond**
Shape and Cutting Style	**Princess**
Measurements	**6.67 x 6.64 x 4.71mm**
Fluorescence	**None**
Girdle	**Sl.Thick to Thick**
Culet	**None**
Inscription	**LAB GROWN, GCAL 8X LG350650232**
Growth Method	**CVD**

GCAL has examined this lab grown diamond and certifies that the specifications noted in this document are accurate within recognized gemological tolerances. GCAL is an independent third-party and stands behind our grading with a 4Cs Consumer Guarantee. The guarantee, grading scales and all images unique to this lab grown diamond are available at GCALUSA.com.

GCAL BY SARINE™
ISO 17025 Accredited Forensic Laboratory
580 Fifth Ave, 27th Fl.
New York, NY 10036
T 212-869-8985
GCALUSA.com

ISO/IEC 17025 2017
ANAB L2177-1 Accredited Testing Lab

© GCAL USA LLC

This laboratory grown diamond was created by the CVD (Chemical Vapor Deposition) method and has the same chemical, physical, and optical properties as a mined diamond. This diamond is Type IIa.

Gemprint®
The fingerprint system for diamonds®

Gemprint is the unique optical fingerprint of your lab grown diamond. This patented technology is positive, forensic identification.

Protect your investment by registering your lab grown diamond and receive discounts up to 10% off your annual insurance premiums. **Register your diamond at GEMPRINT.com**

Laser Inscription

Illustration depicts approx. girdle appearance

Actual Size

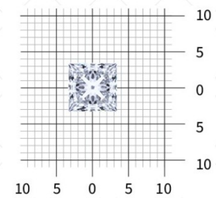

Measurements in millimeters (mm)

Photomicrographs

Actual photographs of the crown and pavilion of this lab grown diamond. View hi-resolution photos at GCALUSA.com

Clarity Characteristics and Locations

Pinpoints Half Moon

8X is the ultimate achievement in precision diamond cutting. Only extraordinarily brilliant and beautiful diamonds achieve **EXCELLENT** grades in all **EIGHT** aspects of CUT quality assessment.

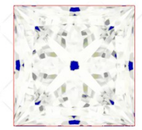

Optical Brilliance

is the overall return of white light to the viewer. It is measured to the thousandth decimal place and is represented in this image. The white areas indicate light return / brilliance, and the dark-blue areas indicate light loss.

Fire

results when white light travels through a diamond and is dispersed into its rainbow of spectral colors. These flashes of color contribute to sparkle and are best viewed as the diamond moves.

Scintillation

is the flashes of white light, or sparkle, produced when light is reflected from a diamond as it moves. This image shows the light returned from a single beam of light when your lab grown diamond is rotated in nine positions.

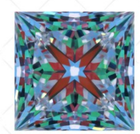

Optical Symmetry

is visualized in this photograph of your lab grown diamond taken in a specific colored lighting environment. The evenness of the pattern illustrates the precision and uniformity of facet shapes and alignment.

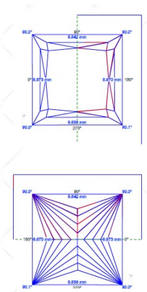

Shape Aesthetics

analyzes features unique to Princess Cuts:

The angles and axis symmetry were assessed to confirm this princess cut is a desirable square shape, with a ratio between 1:1 to 1:1.015 and 90° corners within 0.2 +/-. The axis symmetry images shown here are part of these measurements.

Precise points or chamfered corners on princess cuts are inspected to ensure only diamonds with undamaged corners. at the time of inspection, achieve an Excellent grade.

GCAL 8X™
Ultimate Diamond Cut Grade

GCAL LG350650232 PR 1.87 E VVS1 8X
Scan QR code to view photos and videos of this lab grown diamond, and the 8X grading scale, or go to https://www.gcalusa.com/c/350650232

	P Poor	F Fair	G Good	VG Very Good	EX Excellent
1. Polish					EX
2. External Symmetry					EX
3. Proportions					EX
4. Optical Brilliance					EX
5. Fire					EX
6. Scintillation					EX
7. Optical Symmetry					EX
8. Shape Aesthetics					EX

Proportion Diagram

Optical scanning technology measures each facet and angle to produce an accurate, to-scale diagram of this lab grown diamond.

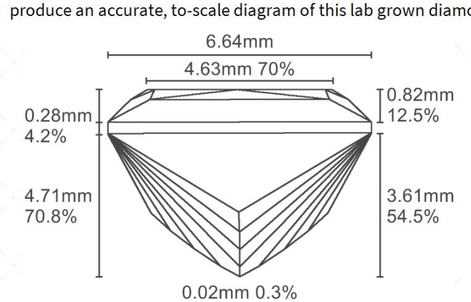

DIAMOND SHAPES

CARAT WEIGHT SIZES

Carat Weight	3.00	2.50	2.00	1.50	1.00	0.75	0.50	0.25
Approx. Size								
Diameter	9.20mm	8.60mm	8.00mm	7.30mm	6.40mm	5.80mm	5.10mm	4.10mm

DIAMOND CLARITY GRADING SCALE

FL	IF	VVS1	VVS2	VS1	VS2	SI1	SI2	I1	I2	I3
FLAWLESS - INTERNALLY FL.		VERY VERY SLIGHTLY INCLUDED		VERY SLIGHTLY INCLUDED		SLIGHTLY INCLUDED		INCLUDED / PIQUE		

DIAMOND COLOR GRADING SCALE

D	E	F	G	H	I	J	K	L	M	N	O	P	Q	R	S	T	U	V	W	X	Y	Z
COLORLESS			NEAR COLORLESS				FAINT			VERY LIGHT					LIGHT							

D - Z DIAMOND COLOR GRADING SCALE

DIAMOND FLUORESCENCE GRADING SCALE

NONE	FAINT	MEDIUM	STRONG	VERY STRONG

DIAMOND POLISH & SYMMETRY GRADING SCALE

EXCELLENT	VERY GOOD	GOOD	FAIR	POOR

BRILLIANT CUT DIAGRAM

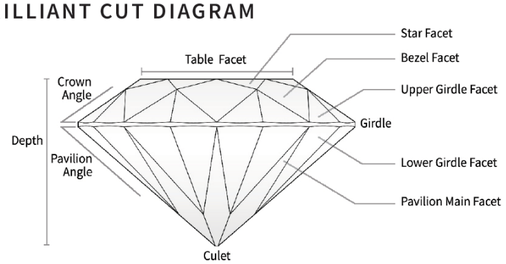

BUY WITH CONFIDENCE

GCAL'S 4Cs GRADING GUARANTEE

The GCAL (Gem Certification & Assurance Lab) philosophy is simple. We believe consumers should feel confident about their diamond purchase, in the same way we believe experts should be accountable and stand behind their work.

This is why your lab grown diamond is protected by a zero tolerance, money-backed grading guarantee. You should be aware, and proud of the fact that GCAL is the only diamond grading lab in the world that fully guarantees the accuracy of its grading. If the carat weight, or any of the cut, color, or clarity grades provided in this GCAL Guaranteed Certificate prove to be of less weight or lower quality, GCAL will reimburse you the difference between what you paid and the current, fair retail value in the market level where you purchased it, of a lab grown diamond with the newly-established grades. For full details of the GCAL Consumer Guarantee, visit GCALUSA.com

GCAL'S MISSION STATEMENT

To provide the most accurate and consistent gemological grading, with uncompromising integrity and unparalleled customer service.

GEMPRINT®

Having a traceable, unique "fingerprint" of your lab grown diamond adds future protection to your investment, as well as peace of mind. GCAL records the distinctive Gemprint of every diamond we certify. This patented technology for positive identification is recognized worldwide as forensic evidence and identification.
Register your lab grown diamond at GEMPRINT.com

CERTIFICATE VERIFICATION

You can verify the authenticity of this certificate by entering your GCAL Certificate number at GCALUSA.com. You can view the high resolution photographs and videos of your lab grown diamond from this certificate, and download a complimentary digital copy of this document to send to your insurance company.

ISO 17025 ACCREDITATION

We believe challenging ourselves leads to better performance. That's why our methods and procedures are independently audited annually, ensuring we uphold the standards of the ISO 17025 Forensic Laboratory Accreditation. In fact, GCAL is the only ISO 17025 Forensic Accredited Gem Lab in the world!

ONE LOCATION. ONE STANDARD. GRADED IN THE USA

GCAL 8X™
Ultimate Diamond Cut Grade

GUARANTEED CERTIFICATE

LAB GROWN DIAMOND

Independently Graded and Guaranteed by GCAL
ISO 17025 Accredited Forensic Laboratory

GCAL 8X™
Ultimate Diamond Cut Grade

8X™ is the highest achievement in precision diamond cutting. The **GCAL 8X™** Ultimate Diamond Cut Grading System encompasses all aspects of diamond CUT quality assessment. Your lab grown diamond has achieved grades of Excellent in all eight aspects of CUT quality assessment. As a result, this lab grown diamond is recognized for its extraordinary brilliance and beauty.

PHYSICAL EXCELLENCE

The first three of the 8X grading factors analyze the exactness of the Physical surface, the facet shapes, as well as the angles. This includes the Polish, External Symmetry and Proportions.

Decades of meticulous mathematical calculations have determined the narrow proportion ranges required to produce superior cut diamonds. Each shape has been studied individually to find the most aesthetically pleasing parameters. Some of the factors considered are listed below.

To view the proportion specifications for each shape, please visit our website GCALUSA.com

Table %	Lower Girdle Facet Length
Depth %	Star Length
Crown Angle/Height	Girdle Thickness
Pavilion Angle/Height	Culet Size

LIGHT PERFORMANCE EXCELLENCE

The next three of the 8X grading factors are Brilliance, Fire, and Scintillation, which analyze the light handling ability of your lab grown diamond. The combination of these factors is the essence of what makes any diamond visibly shine, dance and sparkle from across a room. Fire and Scintillation are graded while the diamond is in motion and interacting with light. View the Fire and Scintillation videos of this lab grown diamond at GCALUSA.com or by scanning the QR code on this certificate.

OPTICAL EXCELLENCE

The last two 8X grading factors consider optical excellence. These factors scrutinize the craftsmanship, the precise alignment of the crown and pavilion facets, the shape outline, and the length-width ratio, ensuring the lab grown diamond achieves aesthetic perfection.

Grading scales for each of the 8X grading factors can be viewed at GCALUSA.com