LAB GROWN DIAMOND

GCAL LG322770001

October 14, 2022

IDENTIFICATION DATA

Gemprint® *The fingerprint system for diamonds*



ID No. NY02-529294
Gemprint is the unique optical fingerprint of your lab grown diamond. This patented technology is positive, forensic identification. Protect your investment and receive discounts up to 10% off your annual insurance premiums.
Register your diamond at Gemprint.com

Laser Inscription



Illustration depicts approx. girdle appearance

Actual Size

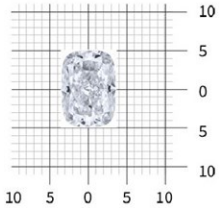

9.94 x 7.08 x 5.05 millimeters (mm)

Proportion Diagram

Optical scanning technology measures each facet and angle to produce an accurate, to-scale diagram of this lab grown diamond.

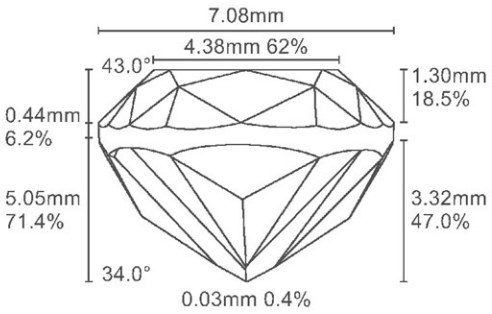

PHOTOMICROGRAPHS



Actual photographs of the crown (top) and pavilion (bottom) of this lab grown diamond photographed at magnifications up to 10x. View hi-res photos at https://www.gcalusa.com/c/322770001

Clarity Characteristics and Locations

Dark Crystals	Table, Bezel
Dark Clouds	Upper Girdle to Bezel, Table

ELECTRONIC COPY

LIGHT PERFORMANCE PROFILE



Optical Brilliance **Excellent**

Optical Brilliance is the overall return of white light to the viewer. It is measured to the thousandth decimal place and is represented in this image. The white areas indicate light return / brilliance, and the dark blue areas indicate light loss.



Optical Symmetry **Good**

Optical Symmetry is visualized in this photograph of your lab grown diamond taken in a specific colored lighting environment. The evenness of the pattern illustrates the precision and uniformity of facet shapes and alignment.

© 2022 GCAL

GCAL

GCAL Certificate No. LG322770001
Mfr Stone No. M92710
Scan QR code to view photos of this lab grown diamond, grading scales, and to download a PDF of this certificate

4C's GRADING

Carat Weight	**3.04**
Color	**H**
Clarity	**VS2**
Cut	**Very Good**

Shape and Cutting Style	**Cushion Brilliant**
Measurements	**9.94x7.08x5.05**
Polish	**Excellent**
Physical Symmetry	**Very Good**
Optical Brilliance	**Excellent**
Optical Symmetry	**Good**
Table %	**62%**
Depth %	**71.4%**
Girdle	**Thick to Very Thick, Faceted**
Culet	**None**
Fluorescence	**None**
Inscription	**"LAB GROWN PAT. 6,858,078" & "LG322770001"**
Growth Method	**CVD**

This laboratory grown diamond was created by the CVD (Chemical Vapor Deposition) method, and has the same chemical, physical and optical properties as a mined diamond.

ONE LOCATION. ONE STANDARD. GRADED IN THE USA

Gem Certification & Assurance Lab has examined this lab grown diamond and certifies that the specifications noted in this document are accurate within recognized gemological tolerances. GCAL is an independent third-party and stands behind our grading with a 4Cs Consumer Guarantee. The guarantee, grading scales and all images unique to this lab grown diamond are available at GCALUSA.com.

Gem Certification & Assurance Lab, Inc.
ISO 17025 Accredited Forensic Laboratory
580 Fifth Ave, Flr 27
New York, NY 10036
T 212-869-8985
GCALUSA.com

ISO/IEC 17025 2017
ANAB L2177-1 Accredited Testing Lab

© Gem Certification & Assurance Lab, Inc.